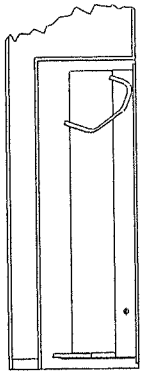

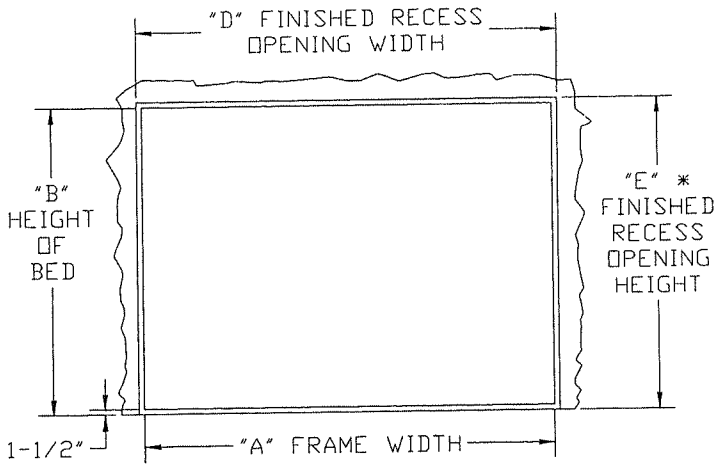

BED RAISED

MATERIAL SPECIFICATIONS:

FRAME : .83 ALUMINUM EXTRUSION
LEG : 3/4" X 18 GUAGE C.R.E.W. STEEL TUBING
FLOORPLATE: 3/4" PAINTED PLYWOOD

CONSTRUCTION SPECIFICATIONS:

B THE BED IS AVAILABLE IN TWO (2) SIZES CHARTED IN THE MIDDLE OF THIS DRAWING.
THE BOTTOM OF THE BED FRAME PROVIDES THE WALL CLOSURE.
THE BED IS SHIPPED WITH NO FACE PANEL INSTALLED, OR WITH A 7/16" FINISHED LAMINATE FACE PANEL, IN CHOICE OF COLORS, OR A 3/8" PAINT-READY FACE PANEL INSTALLED.

RECESS MUST BE CONSTRUCTED BEFORE BED IS INSTALLED. SHEETROCK CONSTRUCTION IS NOT ALLOWABLE ALONGSIDE BED FOR SUPPORT. BED MOUNTS INTO STEEL ATTACHMENT PLATES WHICH ARE SECURED TO EACH SIDE OF RECESS. A MINIMUM OF 3/4" PLYWOOD IS REQUIRED FOR ATTACHMENT OF PLATES AND BUMPERS.
TWO PULL HANDLES ARE PROVIDED WITH EACH BED FOR CUSTOMER TO INSTALL, OR THEY MAY USE THEIR OWN HANDLE DESIGN. TWO PILOT HOLES ARE DRILLED ALONG EACH SIDE OF THE FRAME ON 3" CENTERS FOR ATTACHING HANDLES.

ADJUSTMENT BOLTS ALLOW ALIGNMENT IN THE RECESS OPENING AND COMPENSATE FOR THE WEIGHT AND DIFFERENCES IN BED FACES.
BED IS SHIPPED IN ONE CARTON.

* THIS DIMENSION PROVIDES 1 7/8" GAP BETWEEN TOP RAIL AND RECESS OPENING. THIS IS DONE TO AVOID FINGER PINCHING.

** TWO (2) FACE PANELS ARE REQUIRED WITH A 1/8" GAP BETWEEN THE PANELS.

B BED SIZE	A	B	C	D	E*	F	BED FACE SIZES WIDTH	BED FACE SIZES HEIGHT	
DOUBLE	77	57	48 7/8	77 1/2	58 7/8	47 7/8	76 3/4	55 1/4	
QUEEN	82	63 1/2	53 3/8	82 1/2	65 3/8	54 3/8	81 3/4	30 13/16	**

MATTRESS TYPE	"G"	"H"
SILVER CREST	20" to 21"	18"
GOLD CREST	22" to 23"	18"
PLATINUM CREST	22 1/2 to 23 1/2	18"

EUROBED WALLBED NUMBER FORMAT

□□□□ - E □□ - □□ - □□

B 7856-DOUBLE
8362-QUEEN
BED TYPE

BED TYPE: E-EUROBED
FACE MATERIAL: M-LAMINATE, N-NO FACE, R-PAINTABLE, X-SPECIAL
FACE COLOR
FRAME COLOR
HEADBOARD VINYL COLOR

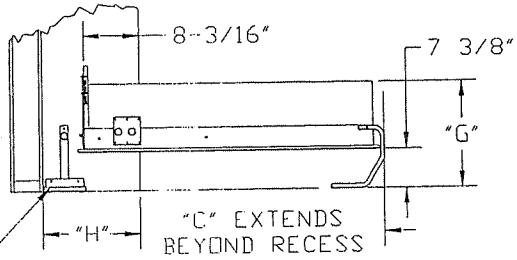

BED LOWERED

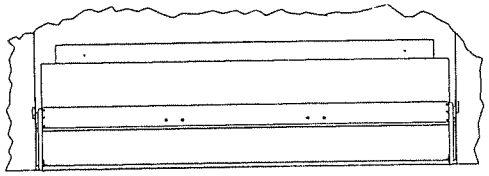

SIDEFOLD

REV	ECO	DATE	BY
B	XXXX	10/10/07	RPA
A	02250	7/27/06	MDL

REMOVE TWIN SIZE REFERENCE DWG ONLY NO BOM CHG NECESSARY

REV DRAWING

DRAWING TYPE	FINISH	U/M	TOLERANCES ARE NON-ACCUMULATIVE UNLESS OTHERWISE NOTED TOLERANCES ARE: XXXX± .0005 XXX± .010 XX± .03 ANGLES ± 1	DIMENSIONS ARE IN INCHES AND (MM'S) FRACTIONS ± 1/32				
SOLID	NONE	PC						
SICO	SICO NORTH AMERICA 7525 CAHILL ROAD MINNEAPOLIS, MN 55439		COPYRIGHT COPYYEAR DO NOT SCALE DRAWING	EUROBED SIDEFOLD SPECIFICATION DRAWING	SCALE NONE	DRAWING NO 71816-SI	REV B	SHEET 1 of 2

FORM UNTITLED

RECESS

LOCATION OF TWO 1-3/8" DIA. X 9/16" DEEP HOLES AND STOP BUMPER MOUNTING

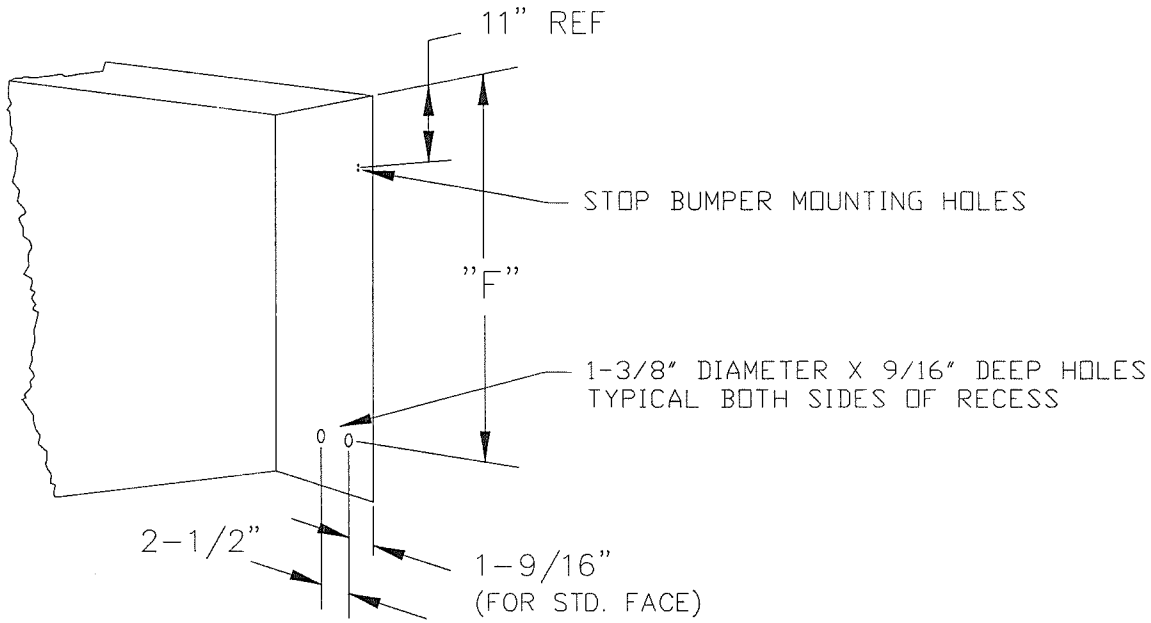

SEE CONSTRUCTION SPECIFICATIONS
READ INSTALLATION INSTRUCTIONS CAREFULLY BEFORE BEGINING ANY INSTALLATION PROCEDURES.

SIDEFOLD

DRAWING TYPE	FINISH	A/V	TOLERANCES ARE NON-ACCUMULATIVE	DIMENSIONS ARE IN INCHES AND [MM'S]	REV	BY	DATE	BY
SOLID	NONE	PC	UNLESS OTHERWISE NOTED TOLERANCES ARE .XXXX ±.0005 .XXX ±.010 .XX ±.03 ANGLES ± 1° FRACTIONS ± 1/32		A		08/29/01 7/27/01	MDL
					DETAILS NEW DRAWING			

SICO — SICO NORTH AMERICA, 7525 CAHILL ROAD, MINNEAPOLIS, MN 55439

COPYRIGHT COPYYEAR
DO NOT SCALE DRAWING

FLOORED SIDEFOLD SPECIFICATION DRAWING

SCALE	DRAWING NO	REV	SHEET
NONE	71816-SF	B	2 of 2

TDRAW 00167BCK